Fire Department Access Information Packet

Colorado Springs Fire Department

Division of the Fire Marshal

Revised July 2016

Table of Contents

Introduction	Page 3
Fire Apparatus Access Design – Outside Hillside	Page 4
Fire Apparatus Access Design – Hillside Overlay Zone	Page 6
Access to Buildings Under Construction or Modification	Page 6
Traffic Calming Devices	Page 7
Figures, Templates, and Examples	Pages 8-12

Introduction

With the interest of preservation of life and property in mind, we have developed this packet of codes and standards to advise the public of our specific needs for access to and around proposed buildings being constructed or remodeled, having a change of use, or going through other modifications.

CSFD deals with many different types of emergencies; therefore, we have a variety of vehicles. Some apparatus are very large and require much more area to maneuver and operate than most others. For example, ladder trucks are in excess of 40 feet in length and when set up with outriggers deployed can exceed 15 feet in width. Additional room is needed for fire personnel to utilize the equipment stored on the sides of the trucks. Also, the number of vehicles needed on an incident and the room to quickly accommodate multiple apparatus is crucial. Depending on the situation, structure fires require a lot of man-power and equipment. A typical structure fire may require as many as five engine companies, two ladder trucks, an Incident Command Center, support vehicles, ambulances, and police cars. Larger incidents would, of course, dictate a larger response.

In the process of producing this packet, the following documents were referenced for text and content:

- Current adopted edition of the International Fire Code
- Colorado Springs Comprehensive Plan
- Colorado Springs Zoning Ordinance
- Colorado Springs Subdivision Ordinance
- Subdivision Policy Manual and Public Works Design Manual
- Hillside Ordinance, Hillside Development Design Manual

The International Fire Code (IFC) authorizes the Fire Chief to make interpretations and judgment calls and grant administrative relief in situations where the code and standards are in conflict with site specific issues.

The Colorado Springs Fire Department is one of several agencies that make recommendations and requirements to the Planning Department, Planning Commission and City Council with regard to site development within our city. We also consult with those interested in pursuing a development project.

The following pages are designed to cover as many as possible issues and questions involving fire apparatus and emergency personnel access onto and around property, road design, fire lanes, ladder access and hillside overlay issues.

Fire Apparatus Access Design (Outside Hillside)

1. Public roadways shall be constructed to City Standards.
2. Public alleys proposed for use for fire apparatus access must meet the following:
    a. Minimum 20-foot unobstructed width.
    b. Fire lane signs posted per Colorado Springs Fire Department specifications (see separate Fire Lane Sign Requirements Information packet).
    c. Unobstructed height clearance of 13 feet 6 inches.
    d. Bringing the alley to minimum standards and associated expenses are the Applicant/Owner's responsibility.
3. All roadways proposed for fire department access shall be engineered and constructed of an all-weather driving surface of asphalt or concrete able to support the weight of fire apparatus. The term "H-20 loading" is used in our comments regarding roadway integrity means a roadway surface capable of supporting a vehicle with a gross vehicle weight of 80,000 pounds.

    Alternative methods such as brick pavers, road base, gravel, etc. may be considered on a case-by-case basis. A State of Colorado Certified Civil Engineer must approve, in writing, the design and installation as meeting the H-20 requirement.

    Access roadways designed to incorporate materials that allow grass to grow through or upon the surface such as Grassrings, Geoblock, Grasstone, or Grass Crete are **not allowed!** It has been our experience that these types of alternatives are unacceptable as a defined H-20 surface area. Those that have been approved in the past, tend to disappear with time and its limits are unknown to the driver of fire apparatus, causing it to be useless.

4. Minimum width for apparatus access shall be as follows: Widths are measured curb face to curb face, or, where there are no curbs, edge of pavement to edge of pavement. These areas must remain unobstructed.
    a. Access roadways with a width of 34 feet or more do not require fire lane signs. Parking is allowed on both sides of the roadway (see Figure 1).
    b. Access roadway widths may be reduced to a minimum of 28 feet. Roadways 28 to 34 feet wide shall have fire lane signs posted or painted on one side of the roadway. Parking is allowed on only one side of the street (see Figure 1).
    c. Access roadways in parking lots may be reduced to a minimum of 24 feet where parking spaces are designed back to back. We acknowledge that the Zoning Ordinance allows reduction in aisle width; however, those needed for fire department access shall be maintained at the 24-foot minimum as required by this standard. Where parking is designed back to curb, a minimum of 28 feet shall be provided without fire lane posting (see Figure 1).
    d. Roadways with features, such as landscape islands, traffic calming devices, etc. that cause a one-way or reduction in width; roadway shall be a minimum

of 20 feet in width and no longer than 200 feet in length and shall have fire lane signs posted or painted on both sides (see Figure 1).

5. CSFD acknowledges that there are desires to reduce access roadway widths for devices such as gates, key pads, mail boxes, and areas of parking lots where the roadway is not needed for access to a structure. We refer to these as “PINCH POINTS”. The design and construction shall meet the following requirements:
    a. A minimum of 15 feet of unobstructed width shall be maintained, including the devices and their mechanisms.
    b. Gates and other devices designed to limit access are in most cases discouraged, but may be allowed and sometimes required. The design of these devices is approved on a case-by-case basis.
    c. Gates and other approved devices designed to limit access shall be equipped with a Knox Rapid Entry device utilizing a manual override system.
    d. Removable bollards designed to slide into the ground within the access ways are **not permitted** unless the design is approved by CSFD.
6. Unobstructed vertical clearance of 13 feet, 6 inches shall be maintained above all fire department access ways. Obstructions include, but are not limited to, wires, trees, tree limbs, awnings, etc. (see Figure 4).
7. Private driveways for one-and two-family dwellings shall be provided with fire department access to within 150 feet of all first story exterior portions of the structures upon the property.
    a. Driveways shall be provided and maintained with a minimum of 12 feet of unobstructed width.
    b. Grades shall not exceed 10% (12% Hillside Overlay)
    c. Turning radii shall meet CSFD specifications (see template).
    d. Dead-end driveways that are required for fire department access and exceed 200 feet shall be provided with an approved turnaround (see examples).
    e. Dead-end fire access roadways in excess of 200 feet must be provided with an approved turnaround (see examples).
8. Cul-de-sac bulbs shall be constructed to the following widths:
    a. Dead-ends not exceeding 500 feet require a minimum of a 84-foot bulb.
    b. Dead-ends exceeding 500 fee require a minimum of 96-foot bulb.
    c. Cul-de-sacs and dead-end access roads exceeding 700 feet shall be provided with intermediate turnarounds as deemed necessary by the CSFD.
    d. Turning radius shall be a minimum of 33 feet inside and 48 feet outside.
    e. Turnarounds, cul-de-sacs and intersections of streets shall not exceed a grade of 4%.
    f. Fire lanes (posted and/or painted), where required, shall comply with CSFD standards.

Fire Apparatus Access Design (Hillside Overlay Zone)

This section applies to those areas identified as “Hillside Overlay Zone” by the official City Zoning Map. The City Code of Colorado Springs may require additional fire protection equipment in residential buildings located within any area designated as such. This may include residential fire sprinkler systems and/or monitored fire alarm systems.

The CSFD reserves its right to establish requirements for access width, turning mechanisms, intermediate, and terminal turnarounds, and special features needed to achieve their operational requirements.

The following requirements are allowed within the Hillside Overlay Zone. Issues not addressed below shall comply with standard access requirements.

1. Road width
    a. A 12-foot driveway may serve up to two-single family dwellings for fire department access, provided it is constructed and maintained to CSFD standards for fire department access including H-20 loading, grades, radii and obstructions.
    b. A 20-foot hillside access place may serve up to five single-family dwellings (see Hillside Development Design Manual for details). Fire lane signs shall be installed on both sides of the roadway.
    c. A 24-foot hillside residential lane may serve up to 20 single-family dwellings (see the Hillside Development Design Manual for details). Fire lane signs shall be installed on both sides of the roadway.
    d. All other access roadways shall be maintained at a minimum of unobstructed width of 28 feet. Fire lane signs shall be installed on one side of the roadway.
2. Grades
    a. Fire apparatus access roadways may exceed the 10% maximum grade by 2% for a distance not to exceed 250 feet. Our transition grades are 6% maximum for a distance of 50 feet minimum.
    b. Grades for cul-de-sacs and turnarounds shall not exceed 6%.
    c. The area surrounding a structure, commonly referred to as the “10-feet defensible space” shall be maintained free of combustibles and shall not exceed 12% grade.

Access to Buildings Under Construction or Modification

1. Required street and on-site fire hydrants/water mains shall be installed, operable tested, inspected and approved by CSFD prior to starting construction.

2. Fire department access roads shall be established, engineered, and maintained serviceable for fire protection and emergency purposes in accordance with the approved development plan, H-20 loading, and the IFC.
3. Access roads shall be kept clear of all obstructions, such as but not limited to, low hanging wires, construction materials, trailers, and contractor's vehicles.
4. Where required, fire lanes shall be posted when the access road is established.
5. Street name identification and temporary address numbers shall be legible and visible from the street(s) or road(s) fronting the entrance to the construction site.
6. The temporary address numbers shall be a minimum of 12 inches in height, weather resistant and shall be maintained until replaced with permanent address numbers.

Traffic Calming Devices

Plans for these devices must be submitted for the Department's review and approval. We support the design of safe streets and the need for devices intended to slow traffic. Such devices include islands, roundabouts, and bump outs; however, we discourage the use of speed bumps. In most cases, these devices can be designed within our minimum requirements (see Figure 4).

Typical Fire Access

Figure 1

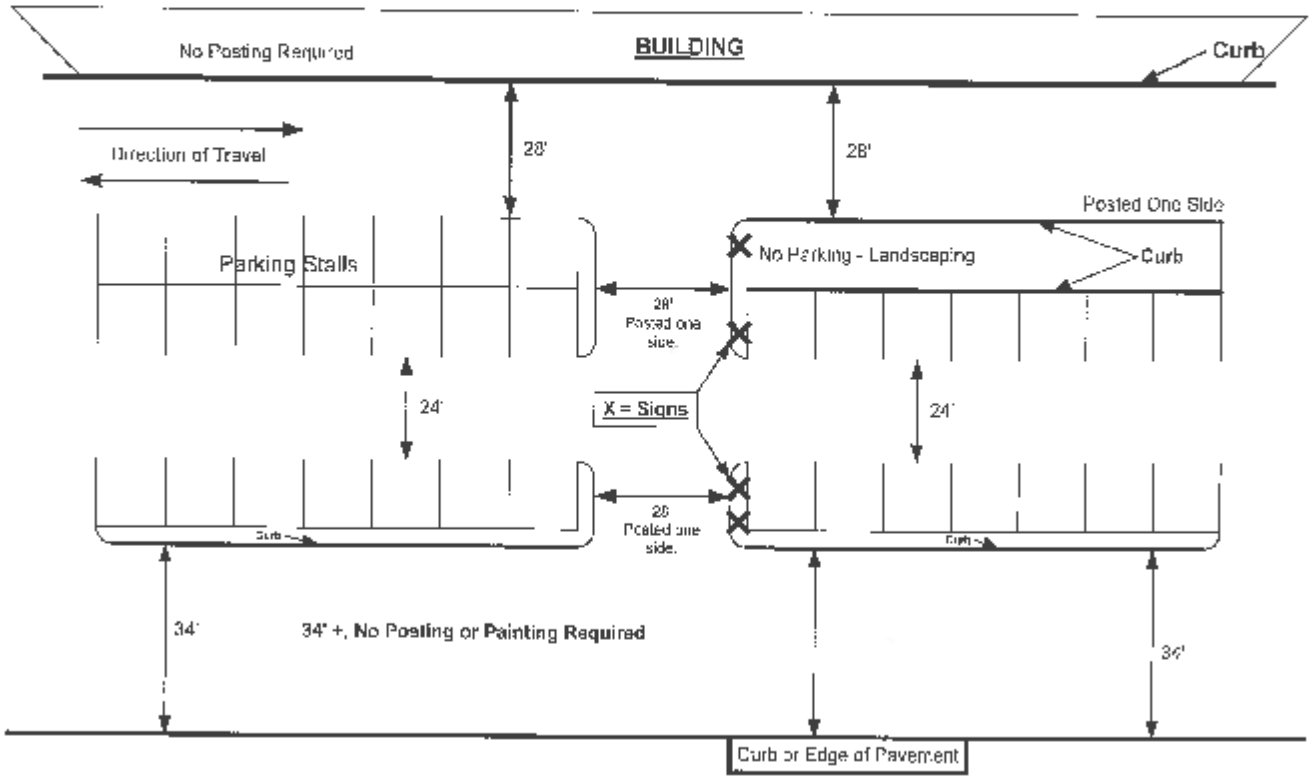

Traffic Calming Devices
Exagerated

Figure 2

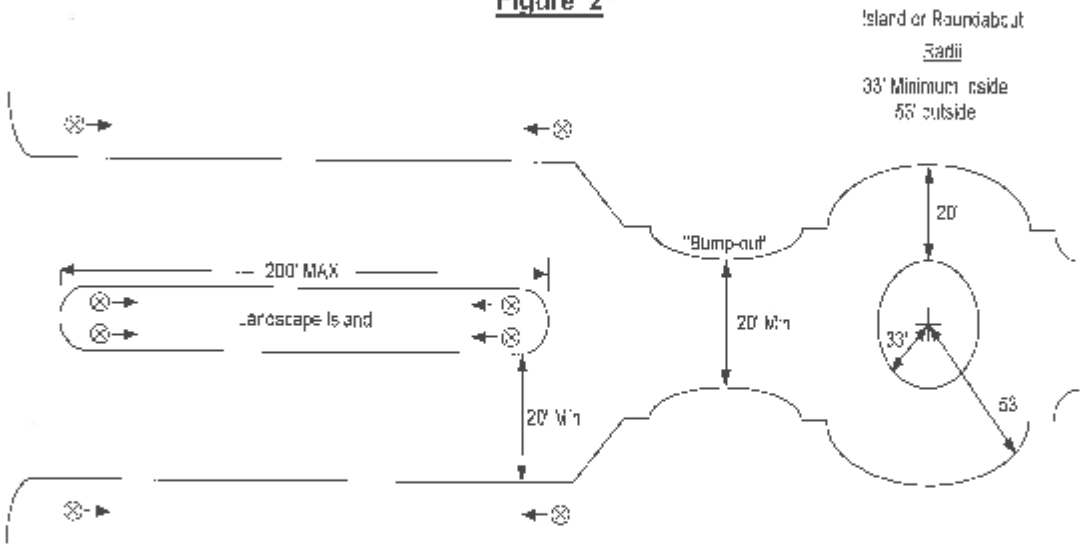

Speed Bumps are Discouraged

Fire Lane Signs (Directions)

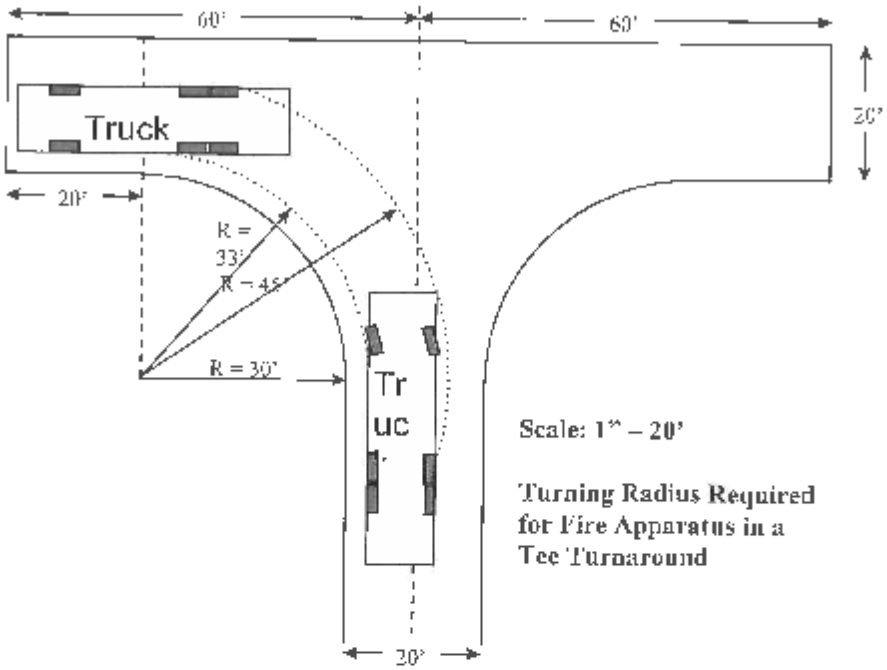

The 20 ft access width is a minimum for use only with an *exclusive* fire department emergency access way. For roadways or public streets, these access widths must be increased. The 60 ft length of 60 ft may remain the same, however. Variations of this hammerhead are shown

These are approved alternatives to and variations from a standard Hammerhead Tee. Any angle from 90° to 180° is acceptable provided the specified lengths and radii are maintained.

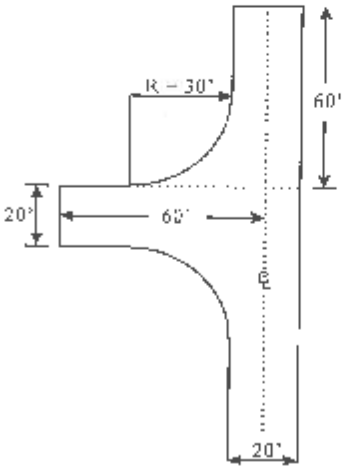

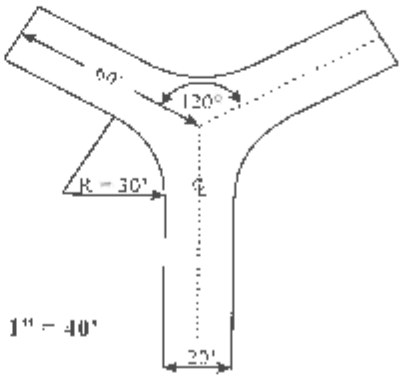

Scale: 1" = 40'

elow:

City Access Roadway Approved Cul-de-Sacs

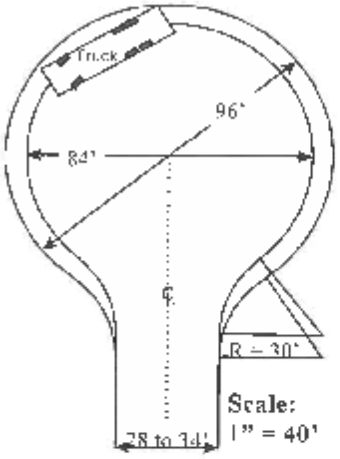

For cul-de-sacs **under 500 ft** in length as measured from the beginning curb of the dead end roadway to the center of the cul-de-sac, an 84 ft diameter bulb may be used. **For any dead-end exceeding 500 ft**, a 96 ft diameter bulb shall be used.

As an alternative to this requirement, the cul-de sac below may be used regardless of the dead-end length from the curb. *Please note the change in scale.*

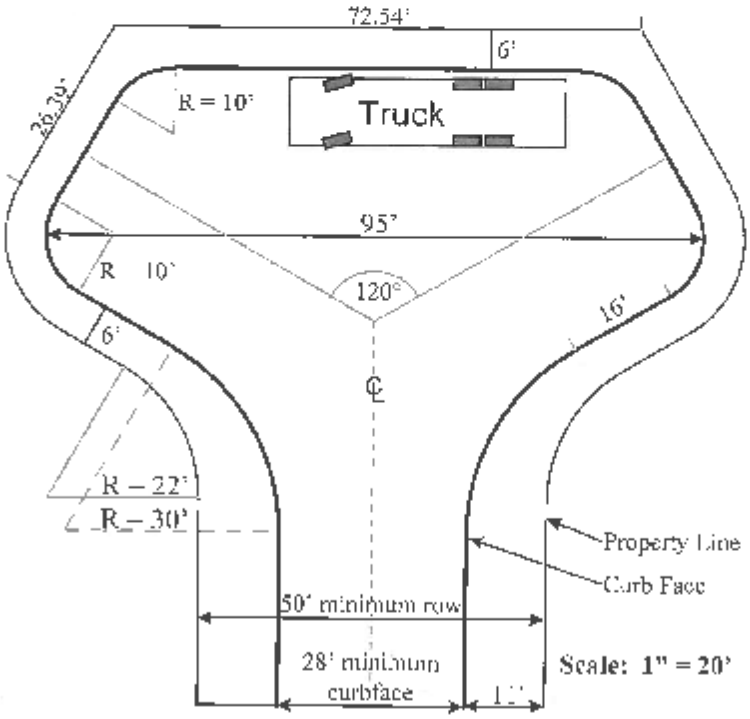
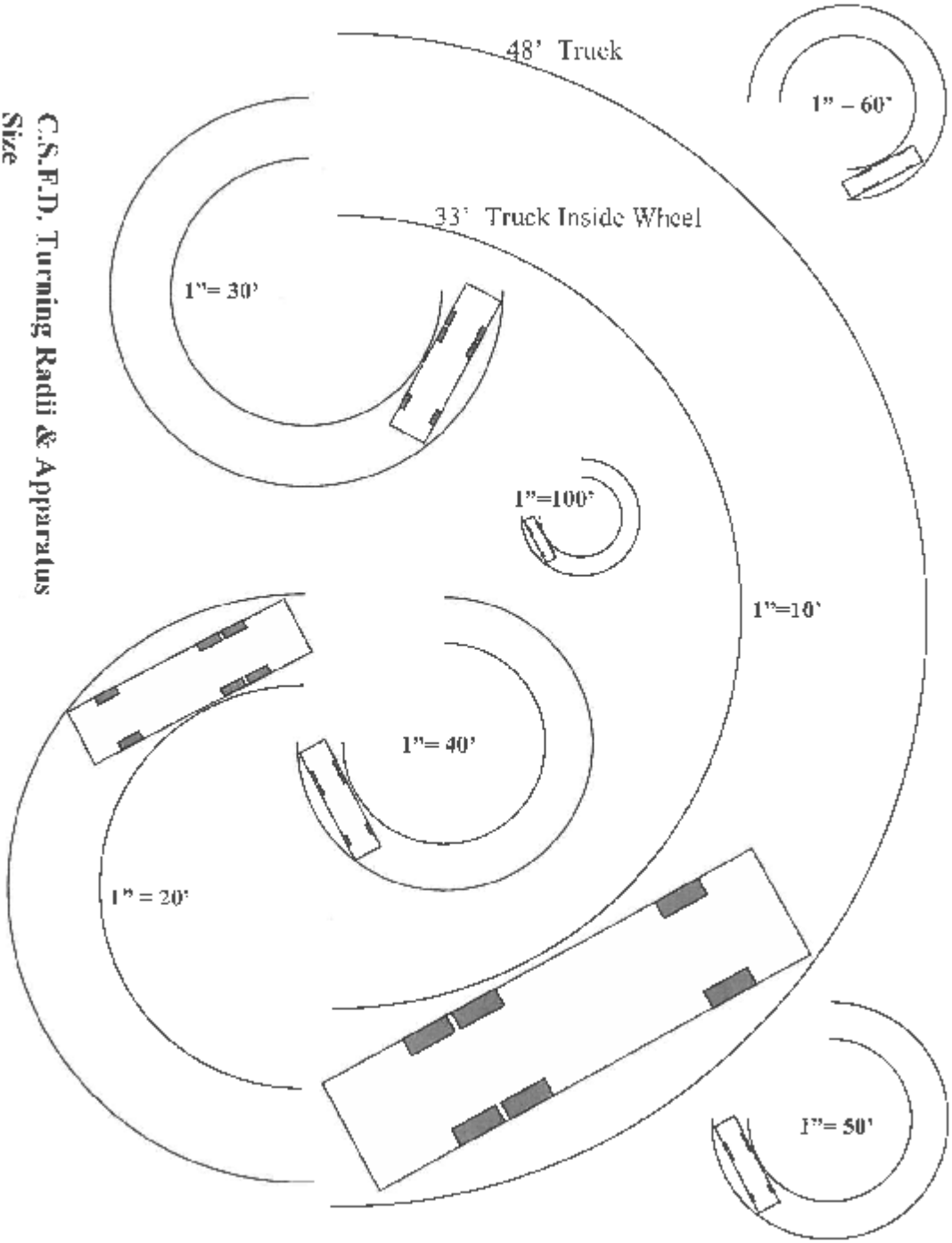
C.S.F.D. Turning Radii & Apparatus Size